KIBBLEWHITE PRECISION MACHINING, INC • 580 CRESPI DRIVE, UNITS H&I • PACIFICA, CA 94044
www.kpmi.us • PHONE (650) 557-2046

Installation Instructions for KPMI Part No.: 80-82150

2016-'22 • Yamaha • YXZ1000R

"Shim in Tappet" Lightweight Racing Valve Spring Kit

A) 80-82150 Kit Includes:

Qty	Application	Description
12 - Pcs	Intake / Exhaust	Ti Retainers
12 - Prs	Intake / Exhaust	Chrome Silicon Springs
12 - Pcs	Intake / Exhaust	H.T. Steel Basewashers
12 - Pcs	Intake / Exhaust	H.T. Steel Tappets

B) Recommended Installed Height - Intake / Exhaust

1. Installed Height . . . . . **1.295"-1.305"**
2. Seat Pressure . . . . . **53 lbs**
3. Open Pressure at 0.330" lift . . . . . **138 lbs**
4. Open Pressure at 0.445" lift . . . . . **167 lbs**
5. Max Valve Lift . . . . . **0.445"**

C) Notes:

1. The difference between the installed height and the coil bind height is considered “Free-Travel”

   The coil bind height is determined by compressing the spring(s) with the Retainer and Basewasher in place (a vice can be used for this operation). Once springs are compressed, measure the distance between the Retainer and Basewasher where the Outer Spring contacts them.

2. Free-travel should always be gross valve lift +0.060″ for safe operation.
3. Retainer-to-Seal / Guide clearance should also be gross valve lift +0.060″ for safe operation.
4. Failure to check valve train clearances can result in serious damage to an engine

Packaged By:_____ Date:_____ .

TECH TIPS

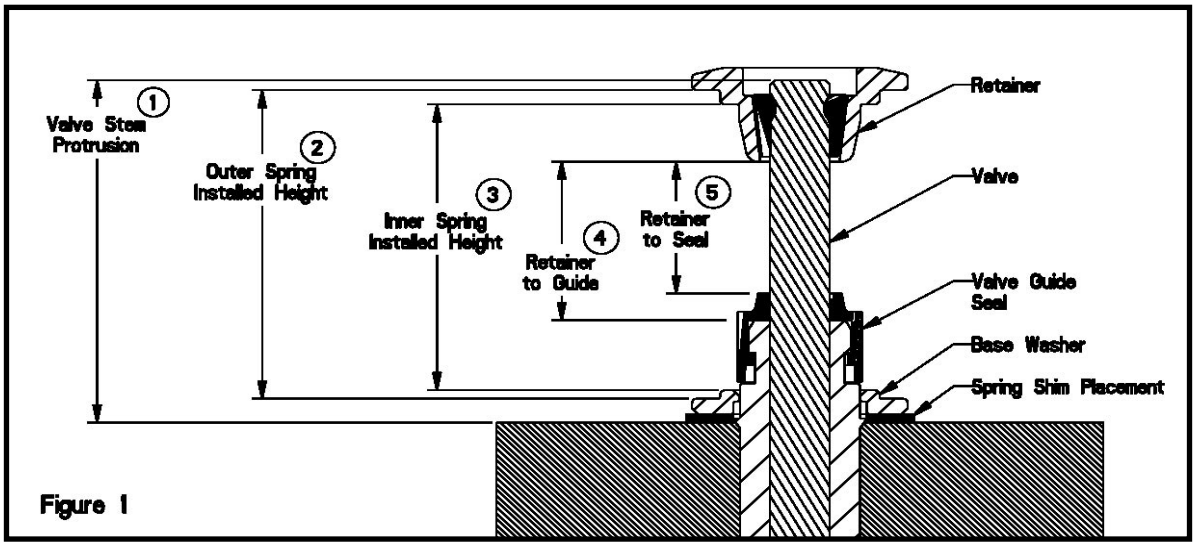

Figure 1

Valve Train Terminology

1. Stem Protrusion is measured from the tip of the valve stem to the cylinder head. See Figure 1.
2. Outer spring installed height is measured where the outer spring contacts the Retainer and Basewasher when assembled (See Figure 1).
3. Inner spring installed height is measured where the inner spring contacts the Retainer and Basewasher when assembled (See Figure 1).
4. Retainer-to-Guide clearance is the distance between the Valve Guide (w/o the seal) and the bottom of the Retainer, with the Valve in the closed position (See Figure 1 and Notes 3 & 4).
5. Retainer-to-Seal clearance is the distance between the Valve Stem Seal and the bottom of the Retainer, with the Valve in the closed position (See Figure 1 and Notes 3 & 4).

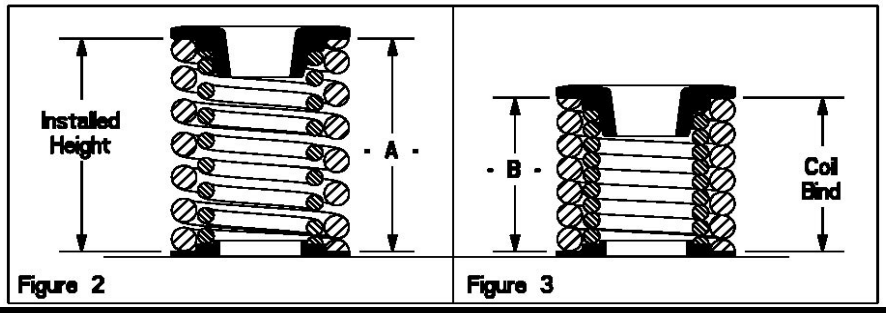

Figure 2 Figure 3

Installed Height

1. In Figure 2 the installed height is measured from where the Outer Spring contacts the Retainer and the Basewasher. This measurement is taken when the Valve, Basewasher, Retainer, and Keepers are assembled in the cylinder head.

Coil Bind / Solid Height:

1. In Figure 3 the coil bind height is determined by compressing the Spring(s) with the Retainer and Basewasher in place (a vice can be used for this operation). Once springs are compressed, measure the distance between the retainer and basewasher where the Outer Spring contacts them.

Notes:

1. The difference between the installed height and the coil bind height is considered “Free-Travel”
2. Free-travel should always be gross valve lift +0.060″ for safe operation.
3. Retainer-to-Seal / Guide clearance should also be gross valve lift +0.060″ for safe operation.
4. Failure to check valve train clearances can result in serious damage to an engine.